Exploded

E3047 VERTICAL KNESS UP/DIP

please note :prats didn't demolitionde part and fast eners not listde on the introduction

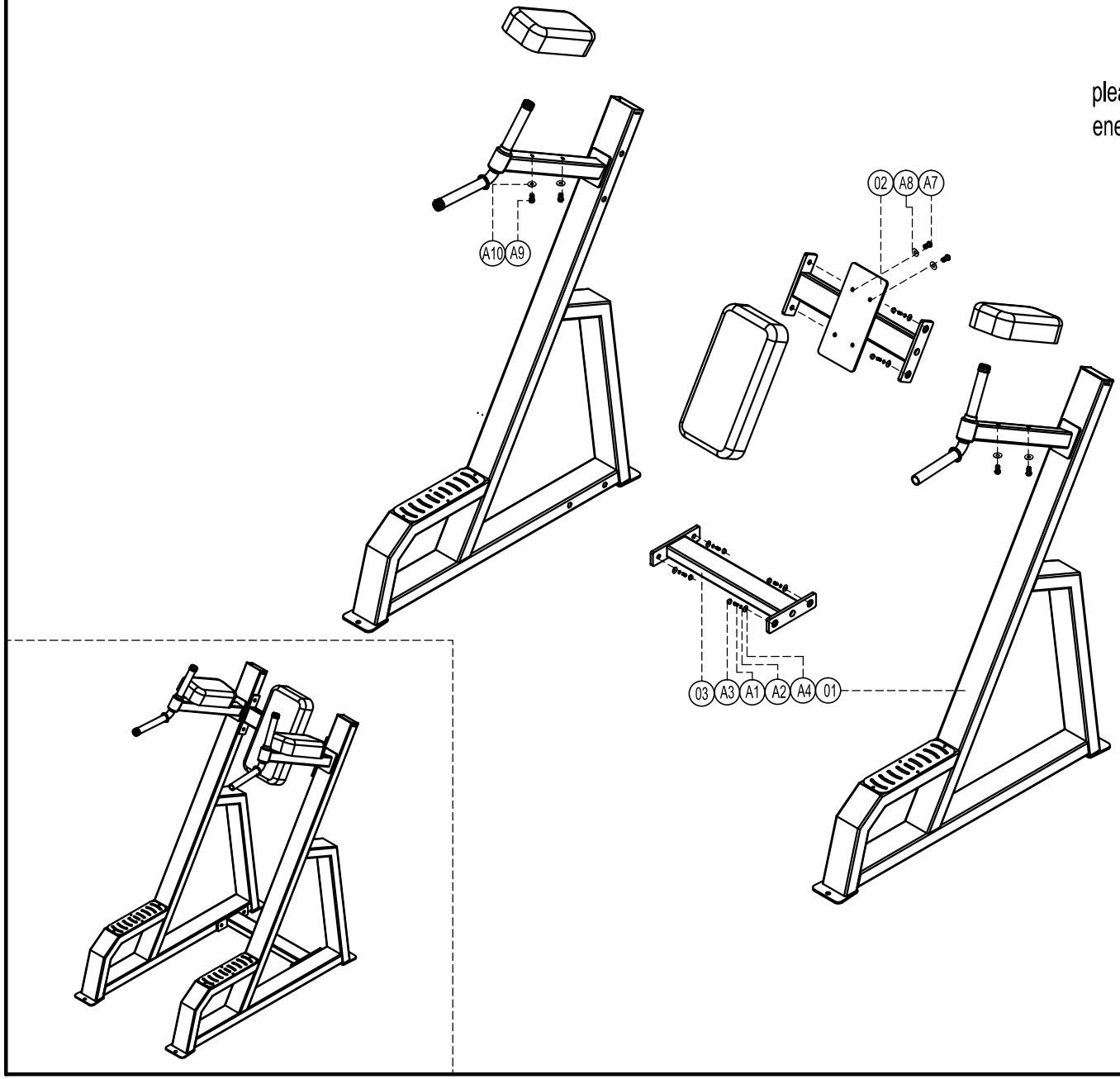

Number	Name	Quantity
A10	Flat washer Φ8	4
A9	Cap head inner hex screw M8*80	4
A8	Flat washer Φ8	4
A7	Cup head inner hex screw M8*35	4
A4	Gasket DQ003	8
A3	Screw cap S208	8
A2	Sping washer ø12	8
A1	Outer hex screw M12*35	8
03	Bottom support set	1
02	Top support set	1
01	Main frame	2